Manufacturing Sanitation Product and Latrine Construction

Advance Short Term Training

Based on May 2023, Curriculum Version I

Module Title: Prepare Bill of Quantity

Module code: EIS SCW3 02 0322

Nominal duration: 16 Hours

Prepared by: Ministry of Labor and Skill

May 2023

Addis Ababa, Ethiopia

Table of Contents

Acknowledgment

The Ministry of Labor and skill would like to extend its gratitude to MoH, One WASH national Program USAID, PSI, Regional Labor, and skill/training Bureaus, TVT College Deans, Instructors, and industry experts for their financial and technical support of Manufacturing Sanitation Product and Latrine Construction training module. Finally, MOLS extends its gratitude to the following instructors and experts who contributed to the development of this TTLM until its finalization.

Mulualem Misganaw	Senior Expert /TVT Sector	MOLS
Mesfin Habtemariam (MSc)	Engineering Technical Manager	PSI/TWASH
Bacha Kitesa (MpH, MA)	WASH Capacity Development Manager	PSI/TWASH
Fisum G/Egizeebiher (BSc)	WASH Business Development Manager	PSI/TWASH
Dagim Demirew	Associate Director, WASH Business development	PSI/TWASH
Ziyad Ahmed (MpH)	Senior Expert	MOH
Wondayehu Wube (MpH)	Senior Expert	MOH
Andualem Abebayhu (MSC)	Instructor	Debark PTC
Mesfin Wondimu (BSC)	Instructor	Aleta Wondo PTC
Girema Moges(BSc)	Instructor	Wolayita PTC
Dagim Fekadu (MSc)	Instructor	Ambo PTC
Solomon Tadese(BSc)	Instructor	GWPTC
Esmael Mohammed (BSc)	Instructor	Kombolcha PTC
Desalegn Alemu (Bsc)	Instructor	Woliso PTC
Tesfaye Assegidew (MSc)	Instructor	Butajira PTC

Introduction to the Module

This module helps the short-term trainee's to know how to calculate the quantity of simple latrine construction work only. The module cover material, labor, and cost estimation for substructure work (excavation work, stonework, concrete work) and superstructure work (Hollow concrete block, finishing works (plastering, painting, pointing), sanitary work, and roof work).

The short-term trainee doesn't expect to perform complex calculations (take-off, bill of quantity, and others). To carry out the latrine construction work a simple calculation of materials, labor, and cost estimation for specified latrines is expected from the trainees.

This module covers the units:

- Substructure Work
- Super structure Work

Learning Objective of the Module:

- Estimate substructure work
- Estimate superstructure work

Module Instruction

For effective use this modules trainees are expected to follow the following module instruction:

1. Read the information written in each unit
2. Accomplish the Self-checks at the end of each unit
3. Perform Operation Sheets which were provided at the end of units
4. Do the "LAP test" giver at the end of each unit and
5. Read the identified reference book for Examples and exercise.

Unit One: Substructure Work

This unit is developed to provide trainees the necessary information regarding the following content coverage and topics:

1.1. Excavation Work
1.2. Stone Masonry
1.3. Concrete Ring
1.4. Concrete Ring Cover
1.5. Rectangular Slab

This unit will also assist trainees to attain the learning outcomes stated in the cover page. Specifically, upon completion of this learning guide, you will be able to:

- Determine Excavation Work
- Estimate Stone Masonry
- Calculate Concrete Ring
- Calculate Concrete Ring Cover
- Calculate Rectangular Slab

Raw material calculation

a) Introduction to Bill of Quantities (BOQ)

Bill of Quantities also referred to as BOQ, is a document formulated in the construction industry to specify materials, labors, and their cost. Before starting any construction one has to have a thorough knowledge about the volume of the work and the probable cost that may be required for the completion of the project. Otherwise, the construction will be stopped before its completion due to shortage of money or materials.

b) Types of Estimates

Approximate/Rough estimate

- To get an idea for the probable expenditure in a short time
- To prepare a preliminary estimate before drawing up a detailed estimate.
- This rough estimation is required to know the financial position of the client before detailed designs are carried out.
- It's based on practical knowledge and cost of similar previous works.

A detailed estimate

- This is the best method and includes the quantities and cost of everything required for the work.
- This is the most reliable and accurate type of estimate.
- The quantities of items are carefully prepared from the drawings and the total cost worked out from up to date market rates.
- Requirements are drawings and specification.

c) Unit of Measurement for construction work

Unit of measurement indicates the quantity of material and works. The following table shows the common unit of measurement for different construction activities.

Table-1: Unit of measurement for construction work

Sl. No.	Civil Construction Works	Measurement Unit
1	Site clearance	m^2
2	Earthwork (Excavation)	m^3
3	Back filling	m^3
4	RCC Concrete ground floor Slab with given thickness	m^2
5	RCC Concrete (Footing, Column, Beam, Slab)	m^3
6	Reinforcement Steel	Kg
7	Hollow concrete block	m^2
8	Brick work	m^2
9	Stone masonry	m^3
10	Flooring	m^2
11	Plastering	m^2
12	Painting	m^2

d) Calculation of volume for concrete materials:

The given work may be in any shape, either it may be in rectangular or circular or hexagonal etc.

The volume of concrete = Surface Area x Depth

Here is general formula to estimate material breakdown;

The general formula for quantizing concrete making materials is given below. You can use this formula for more calculation over any concrete of your need.

$$\textbf{Vol. of "Z"} = \frac{\textbf{"Z" Ratio}}{\textbf{Sum of Ratio}} \, x \, \textbf{Vol. of "Z" x Density of Cement x Shrinkage x Wastage}$$

Where;

- Density of cement is = 1400 kg/ m^3
- Density of sand = 1840 kg/ m^3
- Density of aggregate is = 2250 kg/m^3
- Mix ratios are given based on concrete grade
- Volume of "Z" = Cement /Sand /Aggregate
- Shrinkage and wastage are given.

Note:
1.05 is given for the shrinkage and 1.3 is given for the probability of bulking &

e) Cost Estimation

General formula for cost estimation

- Total cost (TC) = Direct Cost (DC) + Indirect Cost (IC)
- Direct Cost (DC) = Material Cost (MC) + Labor Cost (LC)
- Indirect Cost (IC) = (15% overhead and profit) of DC = 15 % of DC

1.1. Excavation Work

Trench excavation:

The depth of Foundation wall is 0.80m from NGL. Find the length of wall from the foundation plan. Assume 10cm working space in both sides.

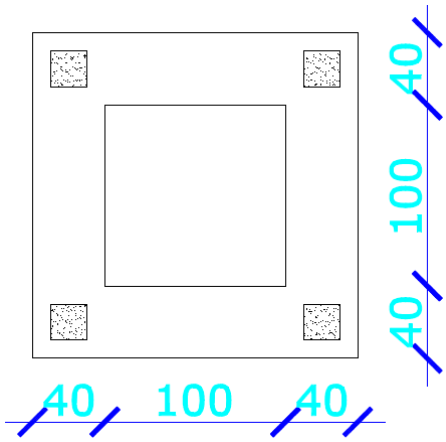

Total volume of trench excavation is:

V= L*W*h

First the total length of foundation wall should be calculated using wall method:

L= 2(1) + 2(1.8) = 5.60m

Then; V= 5.60m x 0.6m x 0.80m

V= 2.688m^3

Pit Excavation:

Pit excavations are made for concrete ring; the internal diameter of the ring is 1m and thickness of the ring is 8cm. the concrete ring has the depth of 1m (refer foundation layout). The volume of pit excavation for the ring is;

$$V = \pi r^2 \times h = 3.14 \times 1.16^2 \times 1 = 4.23\ m^3$$

Note: No working space is considered during estimation. But payment is made at construction site for the extra excavations the contractor makes.

1.2. Stone Masonry

The stone for the foundation wall is measured by its volume. The volume is then calculated by the product of the length, the width and the height. From the given drawing the depth of the foundation wall is 40cm, the length of the foundation is 5.60m and the width of foundation wall is 0.40m. Therefore, the volume of foundation wall will be;

V= l*w*h

V= 5.60m * 0.40m * 1m **= 2.24m^3**

Calculate the amount of material for 40cm stone masonry wall bedded in cement mortar of 1:3 ratios. Assuming the crew consists of a mason, and two daily helpers and a productivity of 5 m^3 per day. Take 15% overhead and profit and Use 30% wastage & bulk age (sand & aggregates) and 5 % shrinkage (for cement), 10% wastage for cement.

Assume the following materials for the stone masonry wall:

Daily wage for labor

a) For mason = 450 Birr/day

b) For helper = 250 Birr/day

Market price of materials

a) Stone = 1000 Birr/m^3

b) Cement = 20 Birr/Kg

c) Sand = 900 Birr/m^3

Acceptable Answers for stone masonry materials

a) Stone = 2.24m^3 x 1 m^3/m^3 = **2.24 m3**

b) Cement = 1/4x 2.24m^3 x 1400 kg/m^3 x 1.1 x 1.05

= 905.52 kg = **0.647 m^3**

c) Sand = 3/4 x 2.24m^3 x 1.3

= **2.184 m^3**

Water/cement ratio = 0.55 × 905.52kg = **498.036 Liter**

Labor Cost

Acceptable Answers for labor cost

1 day. = 5 m^3

X = 2.24 m^3

X = 0**.448 day**. Time required complete the total volume of concrete

Labor cost per day.

a) Mason = 0.448 day x 450 Birr/day. = 201.60 Birr

b) Helpers = 2*(0.448 day x 250 Birr/day) = 224.00 Birr

Total Labor Cost = 425.60 Birr

Cost Estimation

Acceptable Answers for Cost

Total material cost

→ Stone = 2.24m^3 x 1000Birr/m^3 = 2,240.00 Birr

→ Cement = 905.52kg x 20Birr/kg = 18,110.40 Birr

→ Sand = 2.18m^3 x 900Birr/m^3 = 1,968.60 Birr

Total Material Cost = 22,316.00 Birr

→ Direct Cost (DC) = Material Cost (MC) + Labor Cost (LC)

DC = 22,316.00 Birr + 425.60 Birr = **22,741.60 Birr**

→ Indirect Cost (IC) = (15% overhead + 20% Profit) of DC = 35 % of DC

IC = 0.35 x 22,741.60 Birr = **7,959.56 Birr**

→ Total cost (TC) = Direct Cost (DC) + Indirect Cost (IC)

TC = 22,741.60 Birr + 7,959.56Birr = **30,701.16 Birr**

1.3. Concrete Ring

Calculate the amount of material quantity for concrete ring in cement mortar of 1:2:3 ratios. Assuming the crew consists of a mason, and two daily helpers and a productivity of 4.36 m^3 per day. Take 15% overhead and profit and Use 30% wastage & bulk age (sand & aggregates) and 5 % shrinkage (for cement), 10% wastage for cement.

Assume the following materials for the stone masonry wall:

Daily wage for labor

a) For mason = 450 Birr/day

b) For helper = 250 Birr/day

Market price of materials

a) Cement = 20 Birr/Kg

b) Sand = 900 Birr/m^3

c) Aggregate = 700 Birr/m^3

Material Calculation

Acceptable Answers for concrete ring volume

$V_1 = \pi r^2 \times h = 3.14 \times 0.58^2 \times 1 = 1.056\ m^3$

$V_2 = \pi r^2 \times h = 3.14 \times 0.5^2 \times 1 = 0.785\ m^3$

$V_T = V_1 - V_2 = 1.056\ m^3 - 0.785\ m^3 =$ **0.271 m^3**

Acceptable Answers for concrete ring materials

a) Cement = 1/6 x 0.271 m^3 x 1400 kg/m^3 x 1.1 x 1.05

= 73.035 kg or **= 0.0522 m^3**

b) Sand = 2/4 x 0.271 m^3 x 1.3

= **0.117 m^3**

c) Aggregate = 3/6 x 0.271 m^3 x 1.3

= **0.176 m3**

Labor Cost

Acceptable Answers for labor cost

1 day. = 1.084 m^3
X = 0.271 m^3

X = **0.25 day**. Time required complete the total volume of concrete

Labor cost per day.

a) Mason = 0.25 hr. x 450 Birr/day. = 112.50 Birr
b) Helpers = 2*(0.25 hr. x 250 Birr/day) = 125.00 Birr

Total Labor Cost = 237.50 Birr

Cost Estimation

Acceptable Answers for Cost

Total material cost

→ Cement = 73.035 kg x 20 Birr/kg = 1,460.70 Birr
→ Sand = 0.117 m^3 x 900 Birr/m^3 = 105.30 Birr
→ Aggregate = 0.176 m^3 x 700 Birr/m^3 = 123.20 Birr

Total Labor Cost = 1,689.20 Birr

→ Direct Cost (DC) = Material Cost (MC) + Labor Cost (LC)

DC = 1689.20 Birr + 237.50 Birr = **1,926.70 Birr**

→ Indirect Cost (IC) = (15% overhead and Profit) of DC = 15 % of DC

IC = 0.15 x 1,926.70 Birr = **289.00 Birr**

→ Total cost (TC) = Direct Cost (DC) + Indirect Cost (IC)

TC = 1,926.70 Birr + 289.00Birr = **2,215.70 Birr**

1.4. Concrete Ring Cover

Calculate material break down for 140 cm diameter of concrete ring cover. Assume 1:2:3 proportions and grade C-25 concrete. Use water/cement ratio for hand mix is 0.4 - 0.65, take 15% overhead and profit and Use 30% wastage & bulk age (sand & aggregates) and 5 % shrinkage (for cement), 10% wastage for cement. The crew consists of a mason, and two daily helpers will have a productivity of 4.36 m^3 per day.

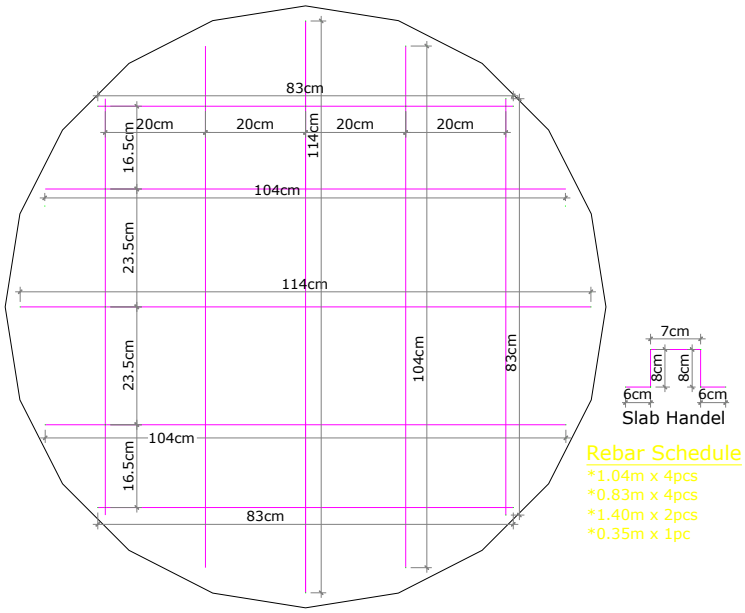

120cm Diameter RC Circular Slab Ring Cover

Assume the following materials for the stone masonry wall:

<u>Daily wage for labor</u>

a) For mason = 450 Birr/day

b) For helper = 250 Birr/day

<u>Market price of materials</u>

a) Cement = 20 Birr/Kg

b) Sand = 900 Birr/m^3

c) Aggregate = 700 Birr/m^3

Material Calculation

Acceptable Answers for concrete ring volume

$V = \pi r^2 \times h$ = 3.14 x 0.60^2 x 0.05 = **0.057 m^3**

Sum of mix ratio = 1 + 2 + 3 = **6**

Acceptable Answers for concrete ring materials

a) Cement = 1/6 x 0.057 m^3 x 1400 kg/m^3 x 1.1 x 1.05
= 15.36 kg or **= 0.011 m^3**

b) Sand = 2/6 x 0.057 m^3 x 1.3
= **0.0.25 m^3**

c) Aggregate = 3/6 x 0.057 m^3 x 1.3
= **0.037 m3**

Water/cement ratio = 0.55 × 15.36kg = **8.45 Liter**

Labor Cost

Acceptable Answers for labor cost

1day = 0.228 m3
X = 0.057 m^3

X = **0.25 day** Time required complete the total volume of concrete

Labor cost per hr.

→ Mason = 0.25 day x 450 Birr/day = 112.50 Birr

→ Helper = 2*(0.25 day x 250 Birr/ day) = 125.00 Birr

Total Labor Cost = 237.50 Birr

Cost Estimation

Acceptable Answers for Cost

Total material cost

→ Cement	= 15.362 kg x 20 Birr/kg	= 307.24Birr
→ Sand	= 0.025 m^3 x 900 Birr/ m^3	= 22.50 Birr
→ Aggregate	= 0.037 m^3 x 700 Birr/ m^3	= 25.90 Birr
	Total Material Cost	**= 355.64 Birr**

→ Direct Cost (DC) = Material Cost (MC) + Labor Cost (LC)
= 355.64 Birr + 237.50 Birr = **593.14 Birr**

→ Indirect Cost (IC) = (15% overhead and Profit) of DC = 15 % of DC
= 0.15 x 593.14 Birr = **88.97 Birr**

→ Total cost (TC) = Direct Cost (DC) + Indirect Cost (IC)
= 593.14Birr + 88.971Birr = **682.11 Birr**

1.5. Rectangular Slab

Calculate material break down, labor and cost estimation for the following 120 cm x 120 cm rectangular slab of 1:2:3 proportions and grade C-25 concrete. Assume water/cement ratio for hand mix is 0.4 - 0.65 and the crew consists of a mason, and two daily helpers and a productivity of 0.288 m^3 per day. Take 15% overhead and profit and Use 30% wastage & bulk age (sand & aggregates) and 5 % shrinkage (for cement), 10% wastage for cement.

Daily wage for labor

a) For mason = 450 Birr/day

b) Helper = 250Birr/day

Market price of materials

a) Cement = 20 Birr/Kg

b) Sand = 900 Birr/m^3

c) Aggregate = 700 Birr/m^3

Solution:

Given:

- Mix ratios for C-25 concrete = 1:2:3
- Density of cement = 1400 kg/ m3
- Density of sand = 1840 kg/ m3
- Density of aggregate = 2250 kg/m3

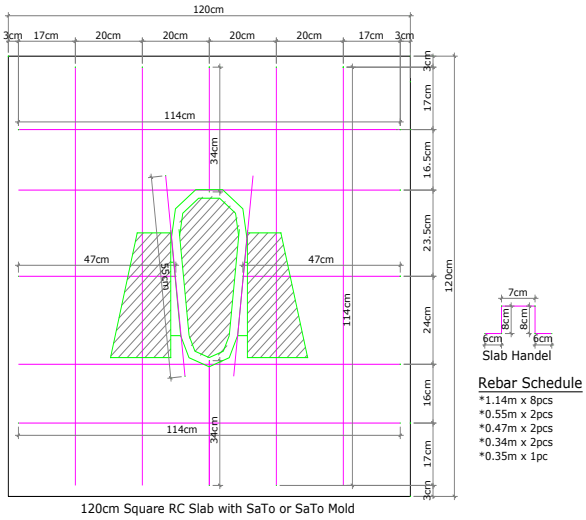

120cm Square RC Slab with SaTo or SaTo Mold

Material Calculation

Acceptable Answers for Volume of work

Volume of concrete = 1.20 m x 1.20m x 0.05m = **0.072 m^3**

Sum of mix ratio = 1 + 2 + 3 = **6**

Acceptable Answers for materials

Cement = 1/6 x 0.072 m^3 x 1400 kg/m^3 x 1.1 x 1.05

= 19.404 kg = **0.0139 m^3**

Sand = 2/6 x 0.072 m^3 x 1.3

= **0.0312 m^3**

Aggregate = 3/6 x 0.072 m^3 x 1.3

= **0.0468 m^3**

Water/cement ratio = 0.55 × 19.404 = **10.67 Liter**.

Labor Cost Calculation

Acceptable Answers for labor cost

1 hr. = 0.288 m3
X = 0.072 m^3

X = **0.25 hrs**. Time required complete the total volume of concrete

Labor cost per hr.

→ Mason = 0.25 hr. x 450 Birr/ day = 112.50 Birr

→ Forman = 2(0.25 hr. x 250 Birr/day) = 125.00 Birr

Total Labor Cost = 237.50 Birr

Cost Estimation

Acceptable Answers for Cost

Total material cost

→ Cement	= 19.404 kg x 20 Birr/kg	= 388.08 Birr
→ Sand	= 0.0312 m^3 x 900 Birr/ m^3	= 28.08 Birr
→ Aggregate	= 0.0468 m^3 x 700 Birr/ m^3	= 32.76 Birr
	Total Material Cost	**= 448.92 Birr**

→ Direct Cost (DC) = Material Cost (MC) + Labor Cost (LC)
= 448.92 Birr + 237.50 Birr
= **686.42 Birr**

→ Indirect Cost (IC) = (15% overhead and Profit) of DC = 15 % of DC
= 0.15 x 686.42 Birr
= **102.96 Birr**

→ Total cost (TC) = Direct Cost (DC) + Indirect Cost (IC)
= 686.42Birr + 102.96Birr
= **789.38 Birr**

Unit Two: Super Structure work

This unit is developed to provide trainees the necessary information regarding the following content coverage and topics:

2.1. Hollow Concrete Block

2.2. Plastering work

2.3. Painting work

2.4. Pointing work

2.5. Cement Screed

2.6. Roof work

This unit will also assist trainees to attain the learning stated below. Specifically, upon completion of this learning guide, you will be able to:

- Calculating Hollow Concrete Block
- Calculating Plastering work
- Calculating Painting work
- Calculating Pointing work
- Calculating Cement Screed
- Calculating Roof work

2.1. Hollow Concrete Block

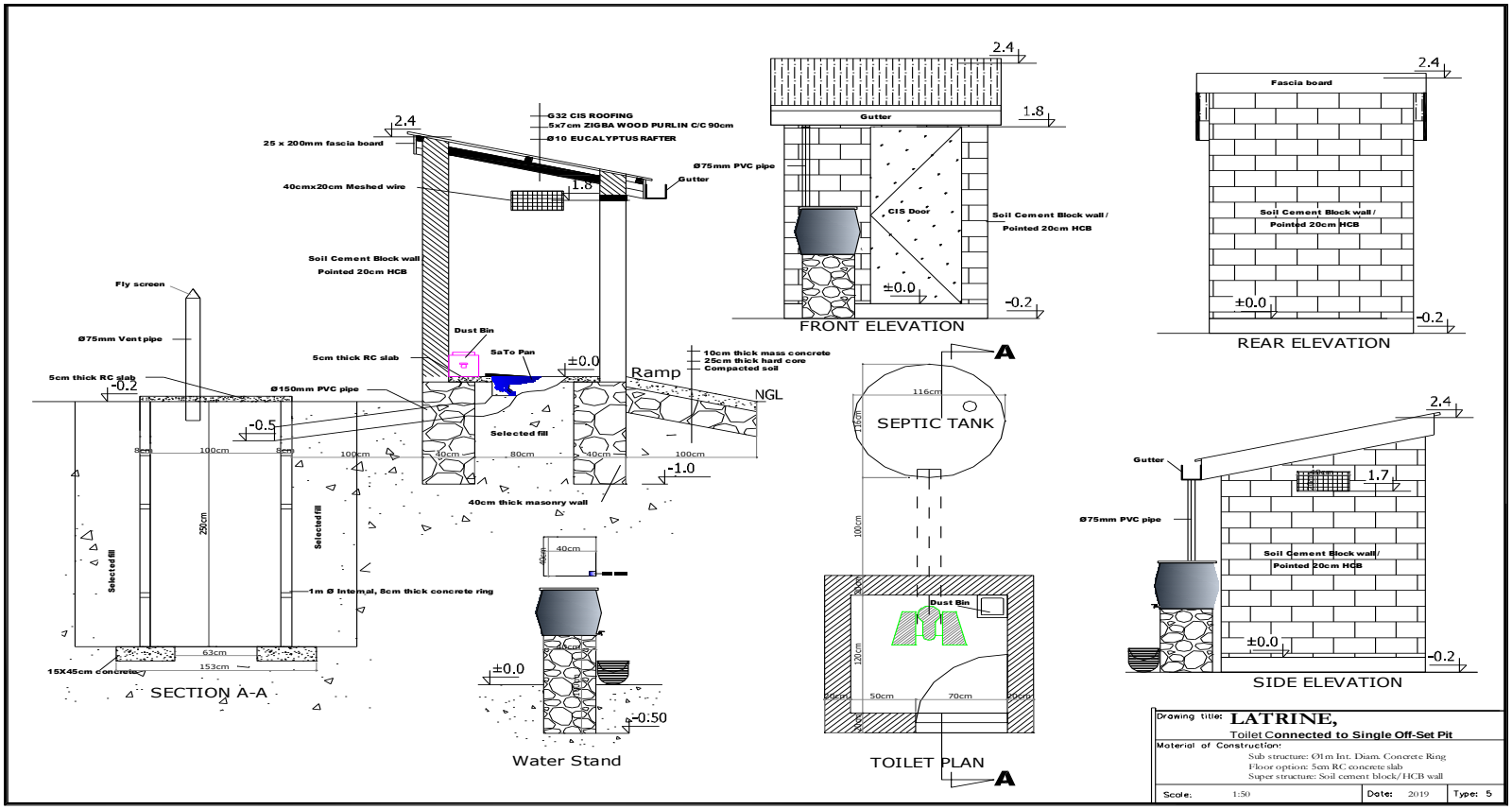

a) Wall Area for Latrine

HCB is measured by its area. The area of the wall is calculated by the product of the length and height of the wall. Assume wall area for 1.4m *1.4m size of toilet with front height of 2.4m and rear height of 1.8m.

Solution:

→ A = L*H

Therefore, the total area of the wall is A

→ $A = A_1 + A_2$

→ A_1 = (1.40 m x 2.40 m) + (1.40 m x 1.80) = **5.88 m^2** …….front and rear side

→ A_2 = 2 (1.40 m x 1.80 m) + ½ (1.40 m x 0.60 m)*2 = **5.88 m^2** ……..left and right side

→ A = A1 + A2

→ A = 5.88 m^2 + 5.88 m^2

→ A = **<u>11.76 m^2</u>**

The area of door and windows should be deducted, because they are not covered by HCB.
A_d area of door and A_w is area of window,

→ A_d = 2.10 m* 0.70 m = 1.47 m^2

→ A_w = 0.40 m x 0.40 = 0.16 m^2

Therefore, the total area of the HCB is A

→ A= 11.76 m^2 – (1.47 m^2 + 0.16 m^2)

→ **<u>A= 10.13 m^2</u>**

b) Material calculation

Calculate material quantity and cost of **9.914 m^2** hollow concrete block wall in the superstructure for 20 cm thickness assuming 1:4 proportion or ratio of the material.

Material calculation for 1 m^3 20 cm thick HCB wall with 1:4 proportion

a) HCB = 13 pcs/ m^2
b) Cement = 10 kg/ m^2
c) Sand = 0.028 m^3/ m^2

Constant for all 1 m^2 of 20cm thickness HCB

Market price of materials

a) HCB = 21 Birr/ pc
b) Cement = 20 Birr / kg
c) Sand = 700 Birr / m^3

Acceptable Answers for materials

a) HCB = 10.13 m^2 x 13 Birr/pc = 131.69 Pcs
b) Cement = 10.13 m^2 x 10 kg/ m^3 = 101.30 kg
c) Sand = 10.13 m^2 x 0.028 m^3/ m^2 = 0.28 m^3

Acceptable Answers for material cost

a) HCB = 131.69 pcs x 21 Birr/pc = 2,765.49 Birr
b) Cement = 101.30 kg x 20 Birr / kg = 2,026.00 Birr
c) Sand = 0.28 m^3 x 700 Birr/m^3 = 196.00 Birr

Total material Cost = 4,987.49 Birr

c) Labor cost

Assume daily output of one mason and two labors are 5 m^2 for labor calculation.

Daily wage for labor

a) For mason = 450 Birr/day

b) For helpers = 250 Birr/day

Acceptable Answers for labor cost

1 day = 5 m^2

X = 10.13 m^2

X = **2 days**. Time required complete the total volume of concrete

→ Mason = 2 days x 450 Birr/hr. = 900.00 Birr

→ Helpers = 2*(2 days x 250 Birr/hr) = 1,000.00 Birr

Total Labor Cost = 1,900.00 Birr

d) Cost Estimation

Based upon the above information (raw materials and labor cost), calculate the total price for rectangular column. Under this task the trainees is expected to calculate the total cost for 9.914 m^2 of concrete volume. Assume HCB with 5% wastage and mortar with 20 % wastage.

Acceptable Answers for Cost

→ Direct Cost (DC) = Material Cost (MC) + Labor Cost (LC)
= 4,987.49 Birr + 1,900.00 Birr = **6,887.49 Birr**

→ Indirect Cost (IC) = 0.25 % of DC
= 0.25 x 6,887.49 Birr = **2,410.62 Birr**

→ Total cost (TC) = Direct Cost (DC) + Indirect Cost (IC)
= 6,887.49 + 2,410.62 = **9,298.11 Birr**

e) Hollow Concrete Block Masonry

I. 10cm thick hollow concrete block wall bedded in cement mortar 1:4

- Materials required
  - H.C.B with 5% wastage=13 pcs /m^2
  - Mortar with 20% wastage=0.0153 m^3/ m^2
    - ✓ Cement=5 kg / m^2
    - ✓ Sand=0.014 m^3/ m^2

II. 15cm thick hollow concrete block wall bedded in cement mortar 1:3

- Material required
  - H.C.B with 5% wastage =13 pcs/ m^2
  - Mortar with 20% wastage=0.0203 m^3/ m^2
    - ✓ Cement=6kgs/ m^2
    - ✓ Sand=0.028 m^3/ m^2

III. 20cm thick hollow concrete block wall bedded in cement mortar 1:3

- Material required
  - H.C.B. with 5% wastage =13pcs/ m^2
  - Mortar with 20% wastage=0.027 m^3/ m^2
    - ✓ Cement=10kgs/ m^2
    - ✓ Sand=0.028 m^3/ m^2

2.2. Plastering Work

Plastering is applied to the internal and external perimeter of the room as well as based on environmental area and material types where project is applied.

→ A= L*H

→ **A = 10.13 m^2 – refer the above wall area calculation "a"**

a) Quantity estimation guide for plastering

Task – 1: Quantity estimation guide for plastering 1:3 mix ratios

Calculate cement and sand consumption for 1 m^2 in 25 mm thick with 1:3 mix ratios of plastering work. Assume 20% wastage.

Acceptable Answers for Volume of work

Volume of mortar = 1 m^2 x 0.025 = **0.025 m^3**

Sum of mix ratio = 1 + 3 = **4**

Acceptable Answers for materials

Cement = 1/4 x 0.025 m^3 x 1400 kg/m^3 x 1.05 shrinkage x 1.1% wastage

= 10.11 kg

= **0.00722 m^3**

Sand = 3/4 x 0.025 m^3 x 1.3% shrinkage and wastage

= **0.0243 m^3**

Number of cement required in bag

Vol. of cement in bag = 10.11 kg/ 50 kg

= **0.2022 Bag** - is required for 1 m^2 area of wall surface.

Task – 2: Quantity estimation guide for plastering 1:2 mix ratios

Calculate cement and sand consumption for 10.13 in 25 mm thick with 1:2 mix ratios of plastering work. Assume 20% wastage. Under this task, one painter and two helpers plaster an area of 10 m^2 per day. Daily wage of plaster and helpers is 450 Birr and 250 Birr respectively. Take the price of cement and sand from the above examples.

Acceptable Answers for Volume of Work

Volume of mortar = 10 m^2 x 0.025 = **0. 25 m^3**

Acceptable Answers for Materials

Cement = 1/3 x 0. 25 m^3 x 1400 kg/m^3 x 1.05 shrinkage x 1.1% wastage

= 134.80 kg or = **0.096 m^3**

Sand = 2/3 x 0.25 m^3 x 1.2% shrinkage and wastage = **0.20 m^3**

Acceptable Answers for labor cost

a) Completion time = 10.13 m^2/10 m^2 = 1.013 day

b) Wage for plaster = 1.013 day x 450 Birr/day = 455.85 Birr

c) Wage for helpers = 2*(1.013 day x 250 Birr/day) = 506.50 Birr

Total labor cost = 962.35 Birr

Acceptable Answers for Material Cost

a) Cement = 134.80 kg x 20 Birr/kg = 2,696.00 Birr

b) Sand = 0.20 m^3 x 900 birr/ m^3 = 180.00 Birr

Total material cost = 2,876.00 Birr

Acceptable Answers for Cost Estimation

→ Direct Cost (DC) = Material Cost (MC) + Labor Cost (LC)

= 2,876.00 Birr + 962.35 Birr = **3,838.35 Birr**

→ Indirect Cost (IC) = 0.15 % of DC = **575.75 Birr**

→ Total cost (TC) = Direct Cost (DC) + Indirect Cost (IC)

= 3,838.35Birr + 575.75Birr = **4,414.10 Birr**

2.3. Painting Work

Under this task, Assuming 2 coats of plastic emulsion paint with one painter and 2 helpers painting an area of 30 m^2 in one day. The area of wall is 10.13 m^2 and daily wage of painter and helpers 400 Birr and 200 Birr respectively. Use the following details for material calculation.

Material calculation for two coats of plastic emulsion painting to plastered surfaces

a) First Coat = 0.07 Lit/ m^2
b) Second Coat = 0.06 Li/ m^2
c) Brush for Plastic Paint = 1pcs/500 m^2
d) Sand Paper = 0.01 m^2/ m^2

Market price of materials

a) Plastic emulsion paint = 800 Birr/4litres
b) Paint brush = 50 Birr
c) Sand paper = 20 Birr/ m^2

<u>Acceptable Answers for quantity of materials</u>

a) Plastic emulsion paint	= 0.13 lit/ m^2 x 10.13 m^2	=1.317 liters
b) Paint brush	= 1 pc	= 1 pc
c) Sand paper	= 0.01 m^2/ m^2 x 10.13 m^2	= 0.1013 m^2

<u>Acceptable Answers for materials Cost</u>

a) Plastic emulsion paint	= 1.317 lit x 800 Birr/4 liters	=1053.6 Birr
b) Paint brush	= 1 pc x 50	= 50 Birr
c) Sand paper	= 0. 1013 m^2 x 20 Birr/ m^2	= 2.026 Birr

<u>Acceptable Answers for labor cost</u>

a) Completion time	= 10.13 m^2/30 m^2	= 0.338 day
b) Wage for paint	= 0.338 day x 400 Birr/day	=135.20 Birr
c) Wage for helpers	= 2*(0.338 day x 200 Birr/day)	=135.20 Birr

Total labor cost = **<u>270.40 Birr</u>**

Acceptable Answers for Cost Estimation

→ Direct Cost (DC) = Material Cost (MC) + Labor Cost (LC)
= 1,105.63 Birr + 270.40 Birr = **1,376.03 Birr**

→ Indirect Cost (IC) = 0.15 % of DC
= 0.15 x 1,376.03 Birr = **206.40 Birr**

→ Total cost (TC) = Direct Cost (DC) + Indirect Cost (IC)
= 1,376.03 + 206.40 = **1,582.43 Birr**

2.4. Pointing Work

Hollow block wall pointed with cement mortar 1:2 with 5% wastage per $10m^2$ of wall

- Materials required
  - Mortar=0.01 m^3/m^2
    - ✓ Cement= 6.37 kg
    - ✓ Sand= $0.012m^3$

2.5. Floor finish

Floor finish is measured by area of the room. A= 1.20 m * 1.20 m = 1.44 m^2 and the area of the floor finish under the door is A= 0.70 m * 0.20 m = 0.14 m^2. Therefore the total area of the floor finish will be A= 1.44 m^2 + 0.14 m^2 = 1.58 m^2. The finishing material is cement screed.

2.6. Roof work

The roof (CIS) is measured by area (m2). Sometimes there is a practice by which the horizontal projection of the roof is used the length of the roof. But the actual height of the roof should be used. The length is calculated by using the Pythagoras theorem. The roofing sheet is one block down from the top of parapet. That is shown by hidden lines to guide the roof. Therefore, the height of the roof, called "pitch" is = 60cm. so we have a right angle triangle with base 1.80 m. look at the following picture.

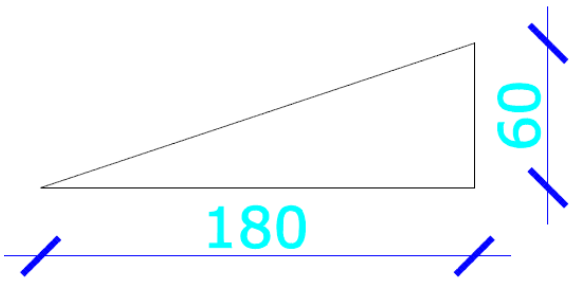

C = actual length of roof

C^2 = 1.80 m x 0.60 m

C = **1.897m**

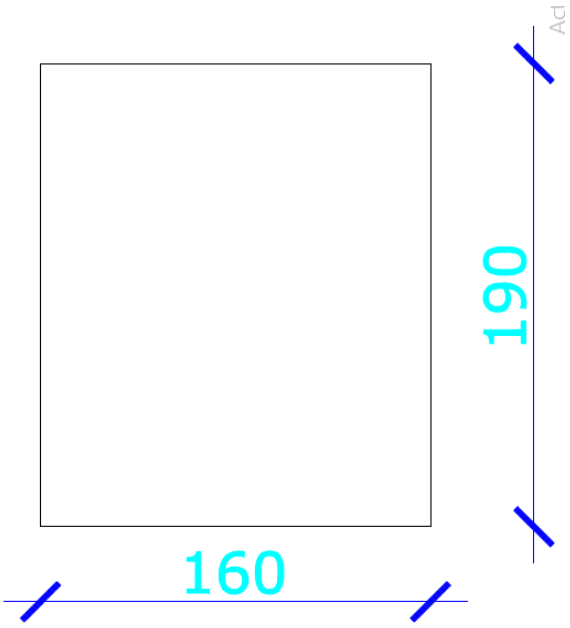

A = Area of the roof

A = 1.897 m x 1.6 m

A = **3.035 m^2**

Cost /Price Summary of Improved Latrine

S. No	Description	Unit	Quantity	Unit price	Total price
1	Trench excavation	m^3	2.688	300.00	806.40
2	Pit excavation	m^3	4.23	400.00	1,692.00
	Total Excavation Cost				**2,498.40**
3	Stone masonry work	m^3	2.24	-	0.00
	Stone	m^3	2.24	1000.00	2,240.00
	Cement	kg	905.52	20.00	18,11040
	Sand	m^3	2.184	900	1,968.60
	Labor	Day	0.448	950.00	425.60
	Total Cost Including DC and IC				**30,701.16**
4	Concrete ring	m^3	1.09	-	0.00
	Cement	kg	73.035	20.00	1,460.70
	Sand	m^3	0.117	900.00	105.30
	Aggregate	m^3	0.176	700.00	123.20
	Labor	Day	0.25	950.00	237.50
	Total Cost Including DC and IC				**2,215.70**
5	Ring cover	m^3	0.226	-	0.00
	Cement	kg	15.362	20.00	307.24
	Sand	m^3	0.025	900.00	22.50
	Aggregate	m^3	0.037	700.00	25.90
	Labor	Day	0.25	950.00	237.50
	Total Cost Including DC and IC				**682.11**
6	Rectangular slab	m^3	0.072	-	0.00
	Cement	kg	19.404	20.00	388.08
	Sand	m^3	0.0312	900.00	28.08

	Aggregate	m^3	0.0458	700.00	32.76
	Labor	Day	0.25	950.00	237.50
	Total Cost Including DC and IC				**789.38**
7	Hollow concrete work	m^2	10.13	-	0.00
	HCB	Pcs	132	21.00	2,765.50
	Cement	kg	101.30	20.00	2,026.00
	Sand	m^3	0.28	700.00	196.00
	Labor	Day	2	950	1,900.00
	Total Cost Including DC and IC				**9,298.11**
8	Plastering 1:2 mix ratios	m^2	10.13	-	0.00
	Cement	kg	134.80	20.00	2,696.00
	Sand	m^3	0.20	700.00	180.00
	Labor	Day	1.013	950.00	962.35
	Total Cost Including DC and IC				**4,414.10**
9	Painting	m^3	10.13	-	0.00
	Plastic emulsion paint	Lit	1.317	800.00	1,053.60
	Paint brush	Pc	1	50.00	50.00
	Sand paper	m^2	0.1013	20.00	2.026
	Labor	Day	0.338	800	270.40
	Total Cost Including DC and IC				**1,582.43**
10	Roof	m^2	3.035	-	0.00
	5 x 7 cm purlin	m	2	300.00	600.00
	Labor	Day	1	700.00	700.00
	Total Cost Including DC and IC				**1,625.00**
11	Cement screed	m^2	1.44	1500.00	2,160.00
	Grand Total After Profit				**53,806.39**

Latrine Detail Drawings

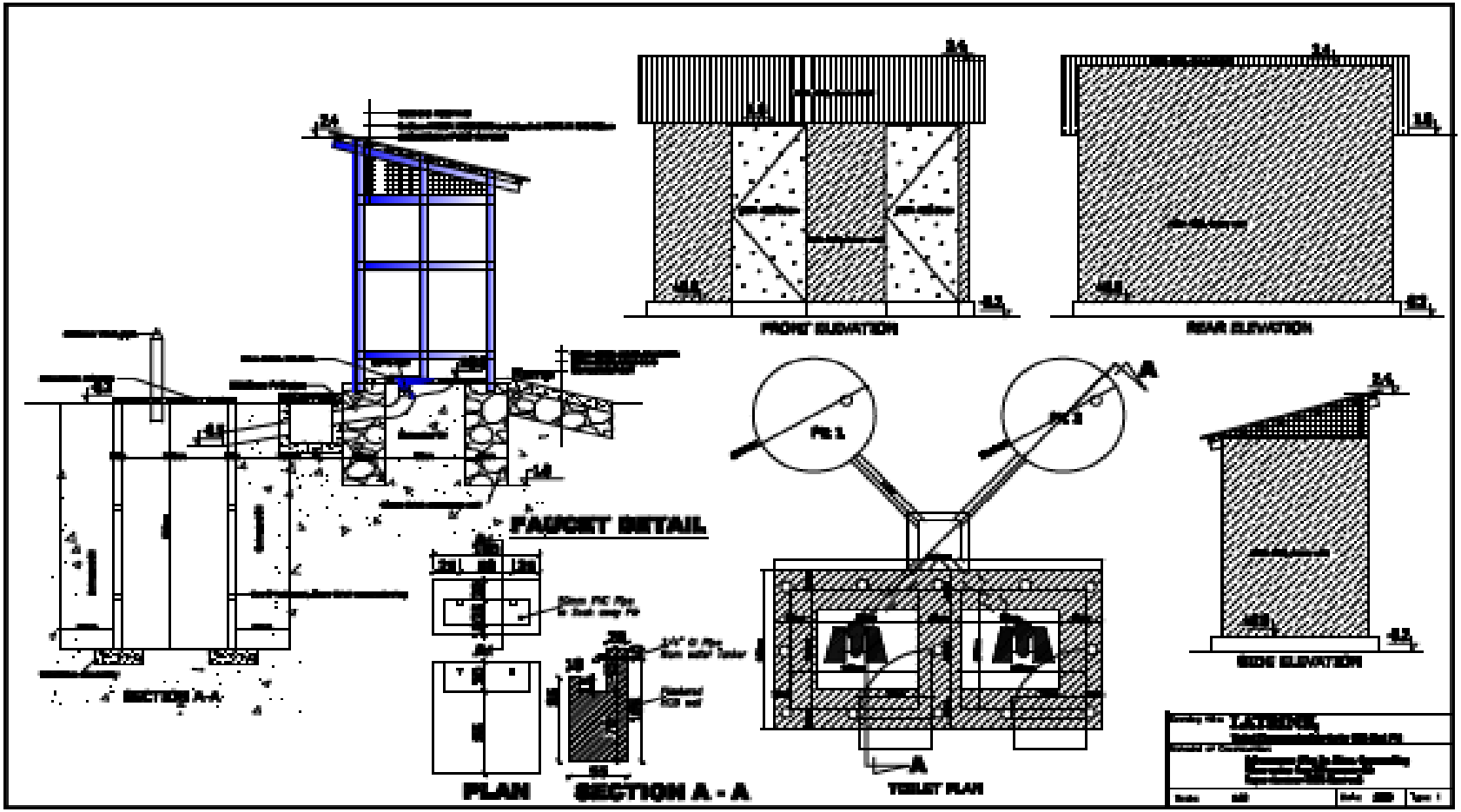

Bibliography

BATCODE Technical Specification and Method of Measurement General Requirements [Book].

Bill of Quantity Preparation [Book].

Cost Estimation and Unit Rate Analysis for Building [Book]. - 2010.

Formula General General Forula College from EBCS [Book].

Health Federal Democratic Republic of Ethiopia Ministry of Onsite Household Latrine Technology Option Planning and Construction Manual [Book]. - Addis Ababa Ethiopia : MoH, 2017.

Level-III Teaching and Training Learning Materials Bill of Quantity [Book]. - 2015.

Project Health Center Construction Quality Management Manual For 747 [Book].

Siraj Nasir Quantity Surveying [Book]. - Haramaya : Haramaya University, 2007.

Participants of This Module (Training Material) Preparation

No	Name	Qualification (Level)	Field of Study	Organization/ Institution	Mobile number	E-mail
1	Andualem Abebayehu	MSc	Hydraulics and Water Resource Engineering	Debark PTC	0982095105	andualemabebayhu@gmail.com
2	Mesfin Wondimu	BSc	Construction Technology and Management	Aleta Wondo PTC	0916981613	mesifinwondimu@gmail.com
3	Girema Moges	BSc	Civil Engineering	Wolayita PTC	0911530068	girmamoges@gmail.com
4	Dagim Fekadu	MSc	Construction Technology and Management	Ambo PTC	0910140914	dag.astu.2005@gmail.com
5	Solomon Tadesse	BSc	Construction Technology and Management	GWPTC	0921414347	soletadss@gmail.com
6	Esmael Mohammed	BSc	Water Work construction technology	Kombolcha PTC	0915543225	Bad9565@gmail.com
7	Desalegn Alemu	BSc	Construction Technology and Management	Woliso PTC	0926771683	desalgnalen@gmail.com
8	Tesfaye Assegidew	MSc	Construction Technology and Management	Butajira PTC	0913442444	tesfayeassegidew@gmail.com
9	Mulualem Misganaw	BSc	PLSC	MOLS	0910463950	mulu9192@gmail.com
10	Bacha Kitesa	MPH, MA	Environmental Health since, public health, Project Management	PSI	0910757797	bachakitesa@gmail.com
11	Mesfin Habtemariam	MA, BSc	Civil Engineering	PSI	0911124992	mesfinhabtemariam@gmail.com
12	Fisum G/Egizeebiher	MPH	Environmental Health Science	PSI	0913222354	fegziabher@psiet.org
13	Ziyade Ahmed	MPH	Environmental Health Science	MOH	0916586603	
14	Wondayehu Wube	BSc, MPH	Environmental Health Science	MOH	0972651005	wondayehuwube@gmail.com